3

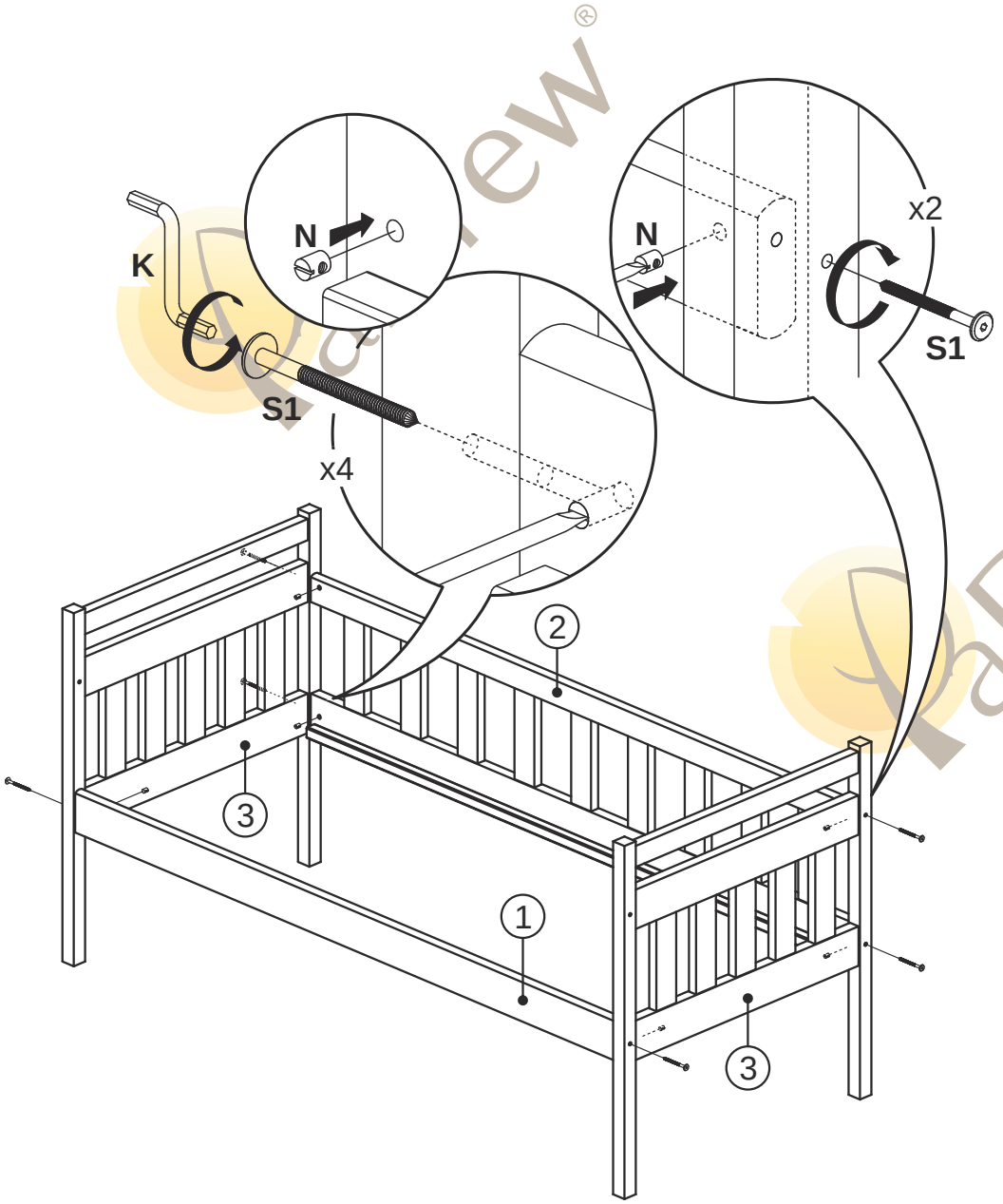

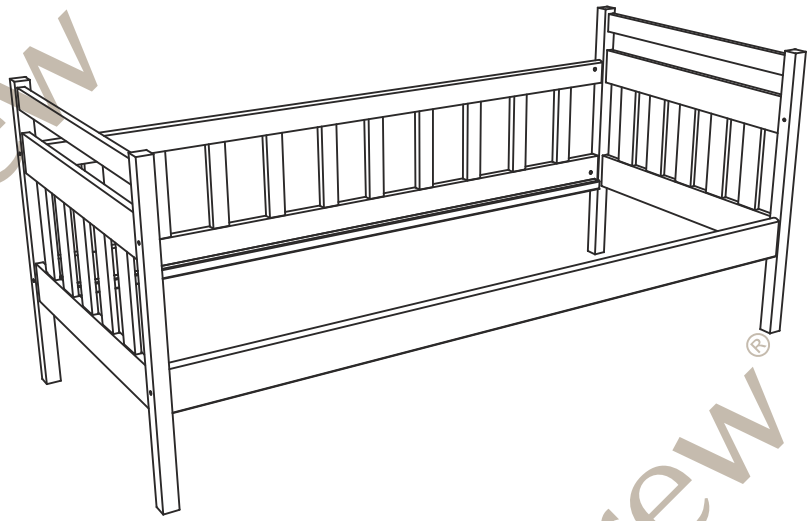

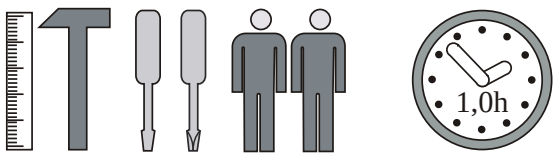

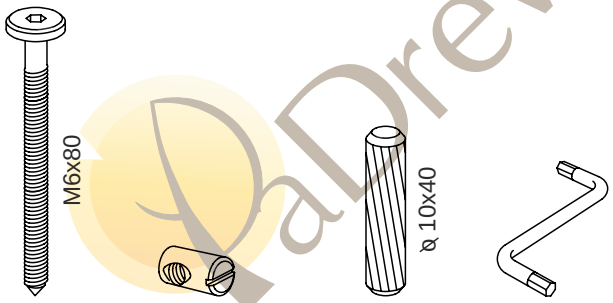

S1 x6 **N** x6 **C1** x8 **K** x1

1

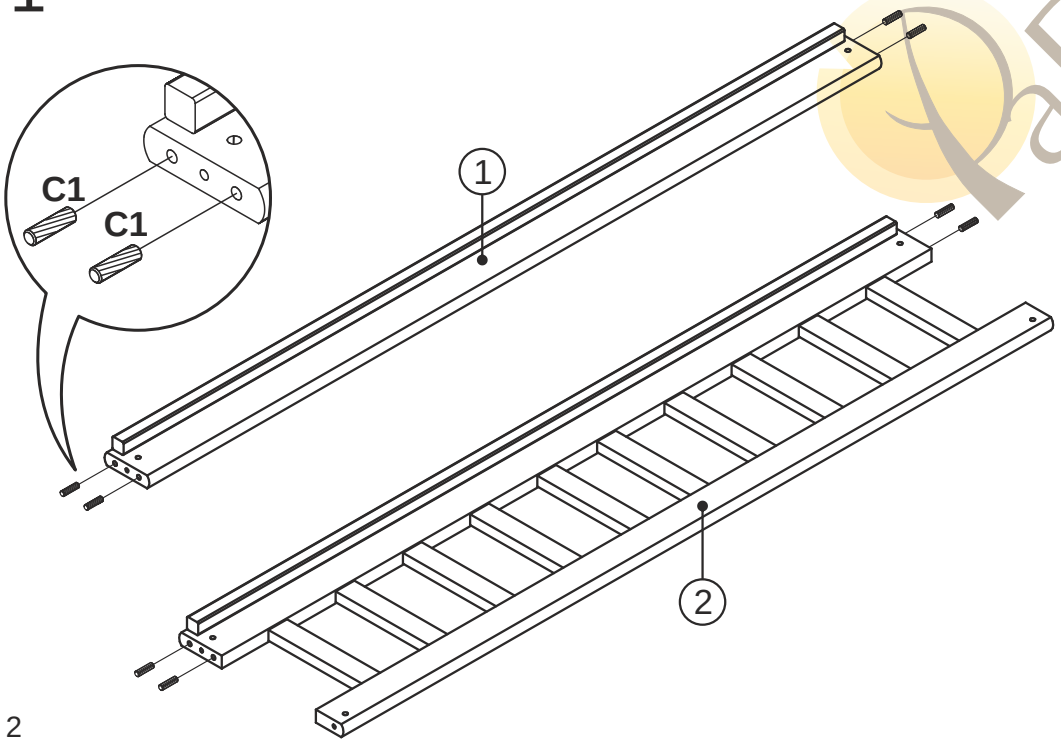

2

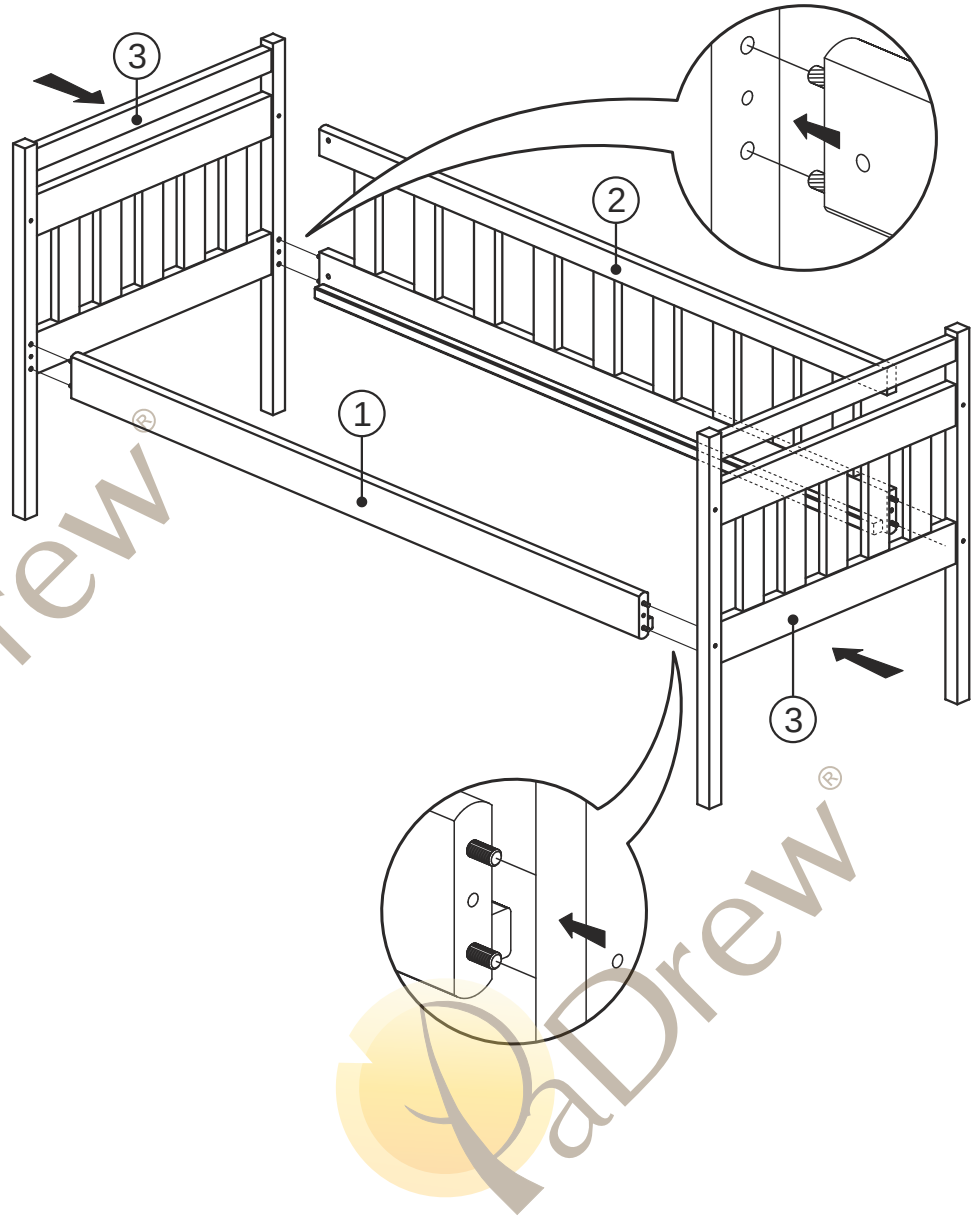

PaDrew®